Fission fragment characterization with FALSTAFF at NFS

D. Doré [1)], F. Farget [2)], F.-R. Lecolley [3)], X. Ledoux [4,2)], G. Lehaut [3)],
Th. Materna [1)], J. Pancin [2)], S. Panebianco[1)],

and the FALSTAFF and NFS Collaborations

1) CEA/DSM/Irfu/SPhN, Saclay, France
2) GANIL, Caen, France
3) LPC, Caen, France
4) CEA/DAM/DIF, F-91297, Arpajon, France

Outline
NFS facility
Motivations for fission studies
FALSTAFF
Description
Simulations
SED performances
Conclusion

SPIRAL2 … under construction

NFS Collaboration

Spokesperson : X. Ledoux
(~20 institutes, 60 physicists)

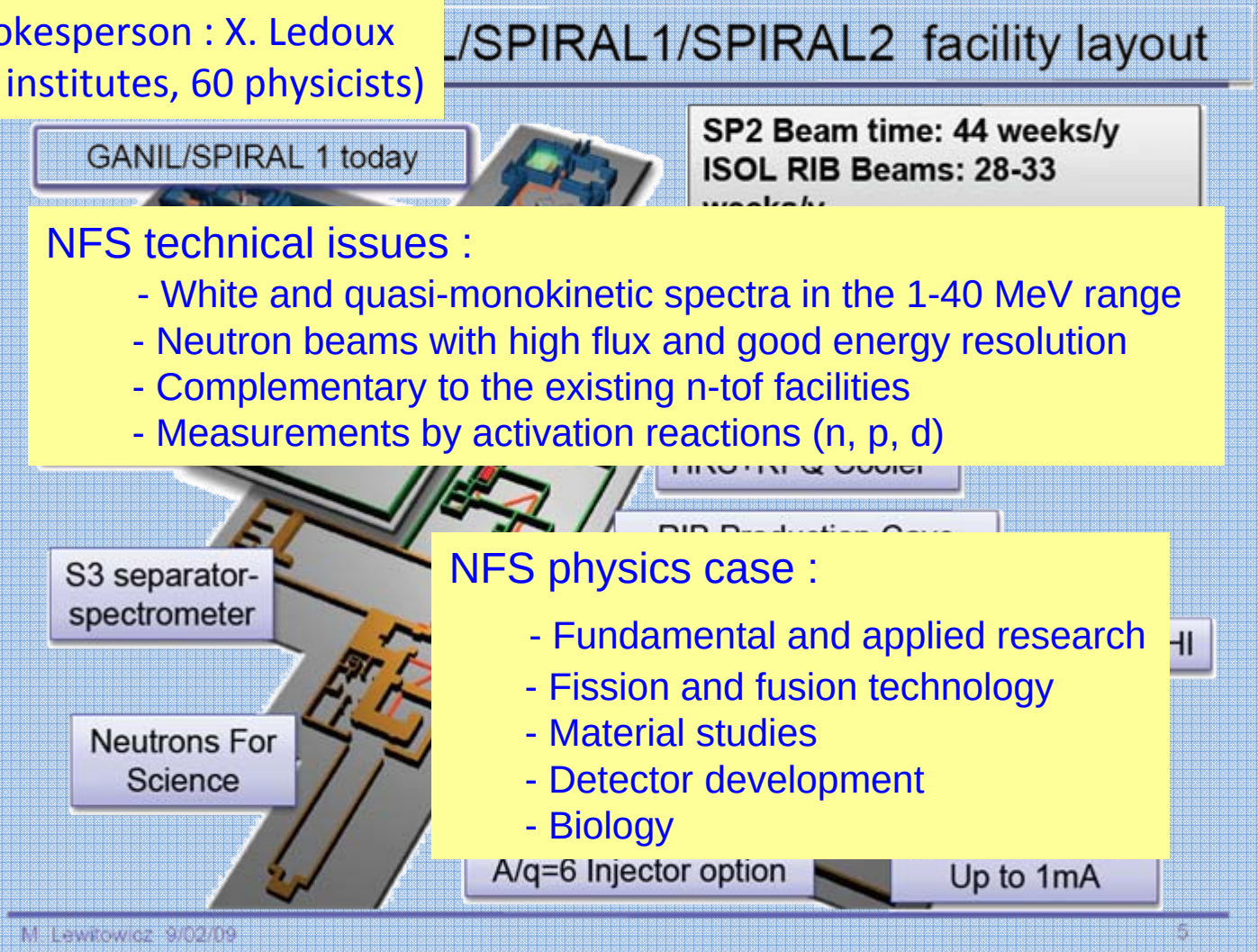

NFS technical issues :

- White and quasi-monokinetic spectra in the 1-40 MeV range
- Neutron beams with high flux and good energy resolution
- Complementary to the existing n-tof facilities
- Measurements by activation reactions (n, p, d)

NFS physics case :

- Fundamental and applied research
- Fission and fusion technology
- Material studies
- Detector development
- Biology

NFS Facility

Continuous spectrum : E_{max} = 40 MeV , <E> = 14 MeV

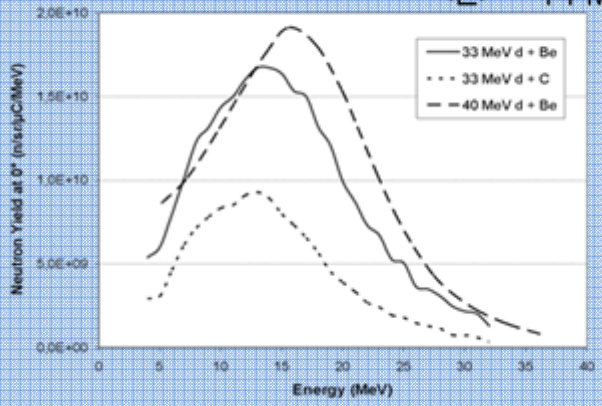

Quasi-monokinetic beam : E_n = up to 31 MeV

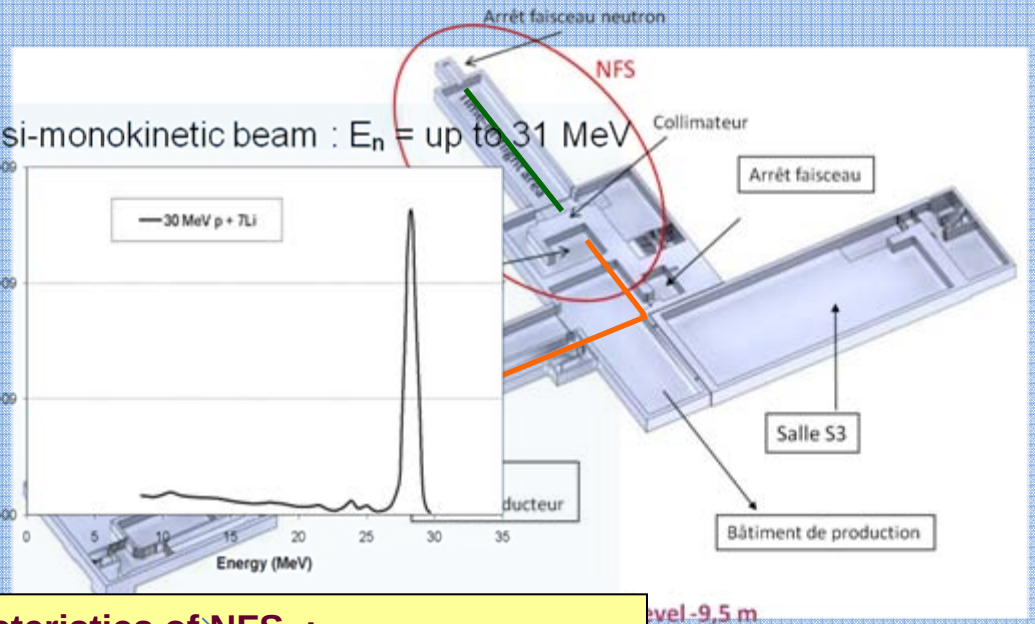

Characteristics of NFS :

- I_{max} = 50 µA
- Frequency < 1MHz, burst

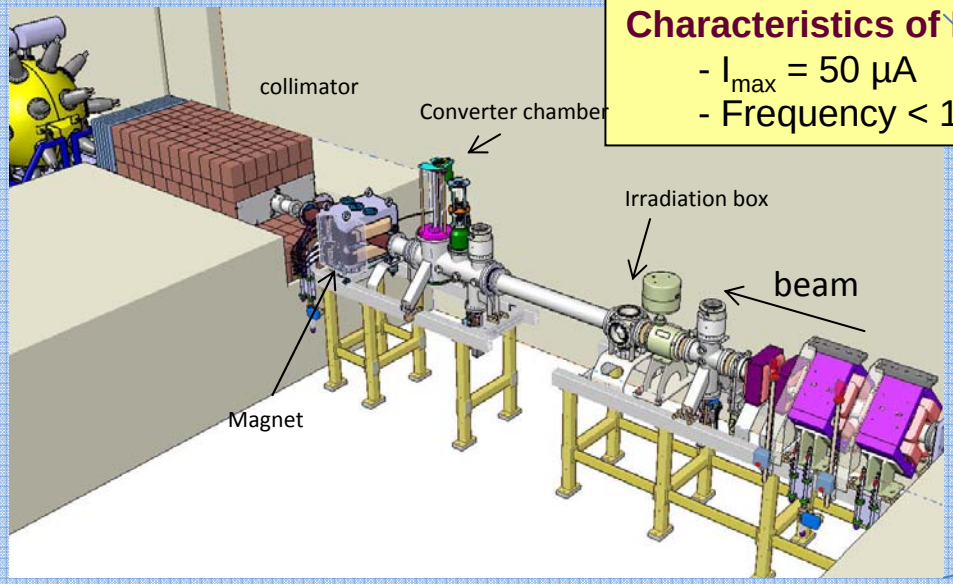

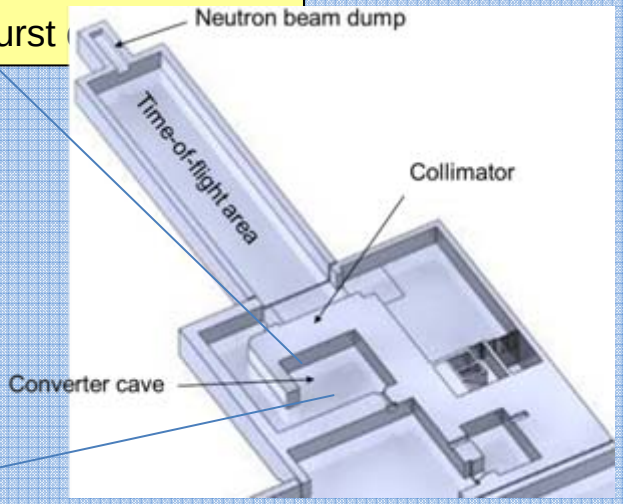

Neutron converter

CEA/DSM/Irfu

Be converter for neutron production

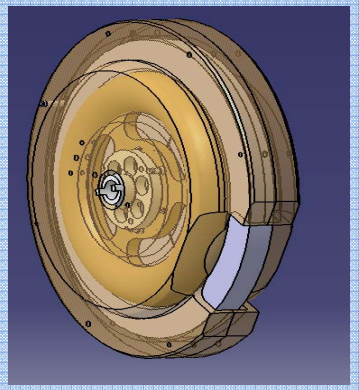

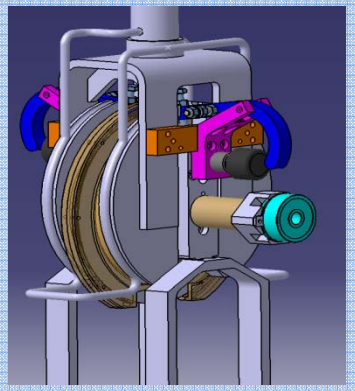

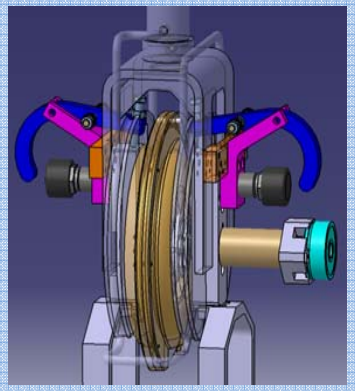

Extraction and handling systems

CEA/DSM/Irfu

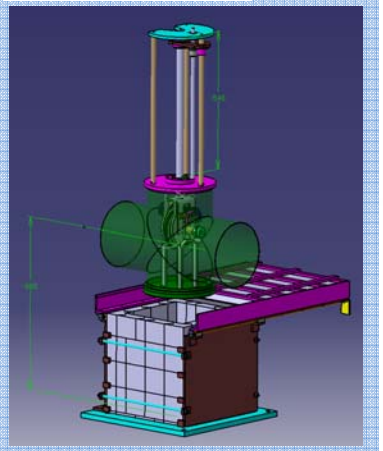

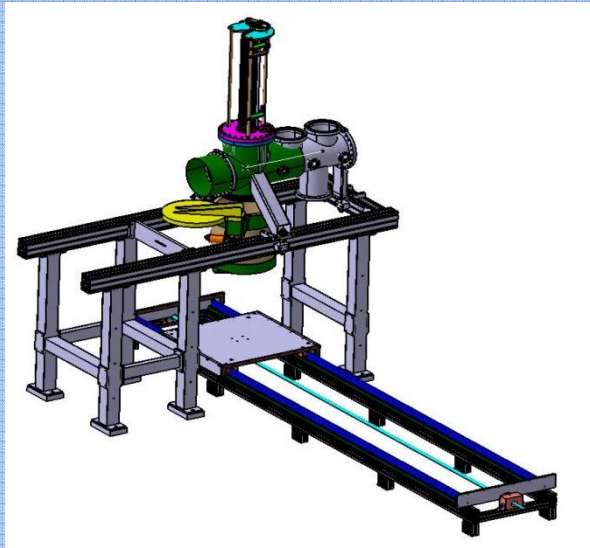

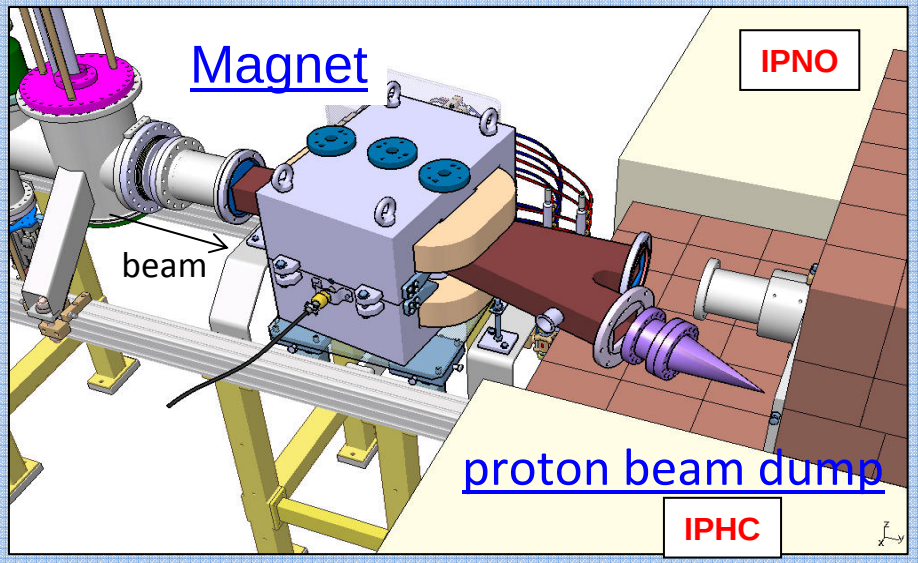

NFS optimization

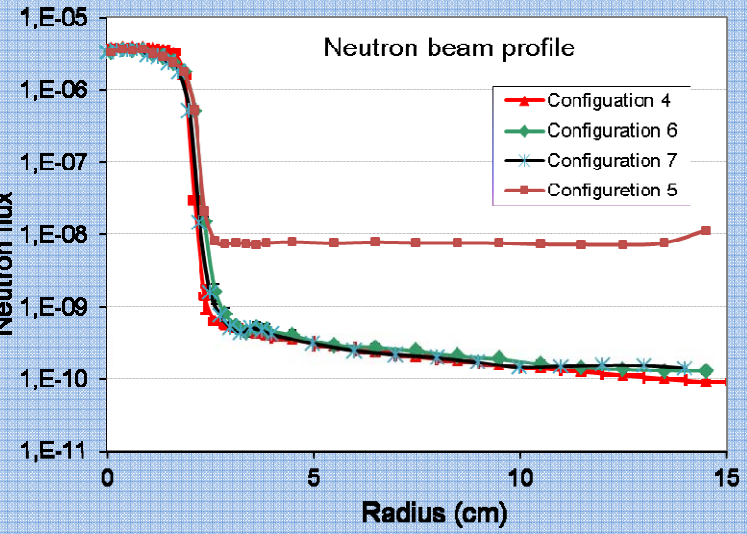

Neutrons

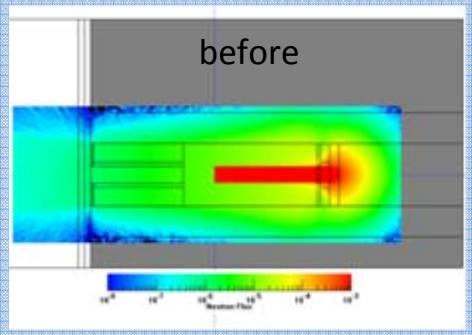

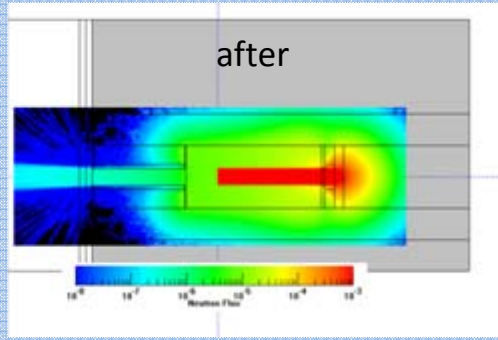

Collimator

GANIL

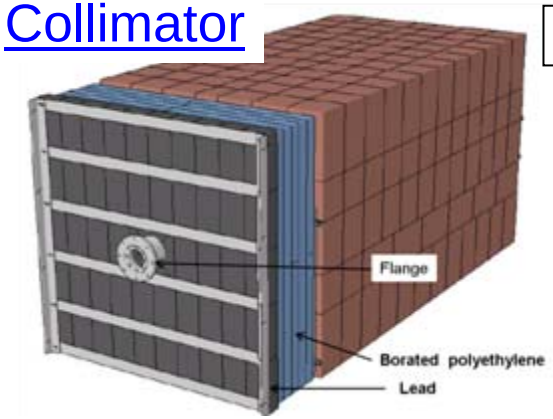

Neutron beam dump

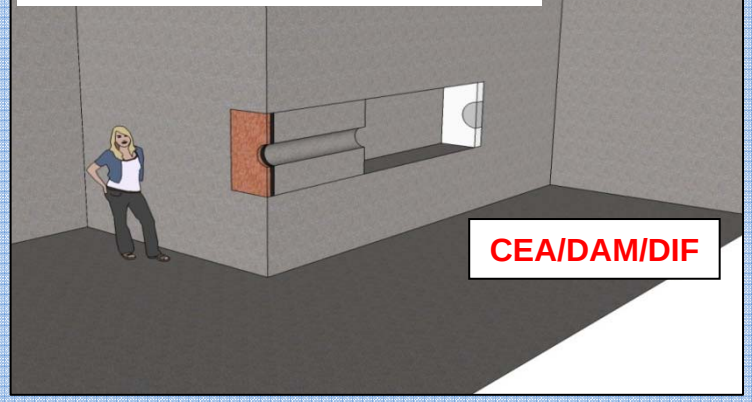

LINAG

NFS

NFS Installation

MoU for NFS construction, signed the 26th of January 2012

8 partners :

- GANIL, Caen, France
- CEA/DAM/DIF, Arpajon, France
- CEA/DSM/Irfu, Saclay, France
- IN_2P_3, France
- CEA/DEN, Cadarache, France
- NPI, Řež, Czech Republic
- Uppsala University, Uppsala, Sweden
- KIT, Karlsruhe, Germany

Capital investment : 523 k€

Human resources : 350 person-month

Total investment : 3185 k€

PLANNING

NFS installation : end-2013

1st Beam : mid-2014

LOI : *Neutron induced reaction studies (4)*
Fission studies (3)
Cross section meas. by activation (2)
Biology (1)
Detector development (1)

Motivations for fission studies

Improvement of models
(microscopic / phenomenological)

Libraries

Study of the fission mechanism

Provide nuclear data needed for applications (GEN IV, SPIRAL2)

TKE → Energy sharing
TKE vs E_n → intrinsic/collective exc
A and Z yields. → shell effects
Neutron mult → Exc. Ene. sharing, deform.

A and Z dist. → poisons, DN precursors, decay heat
Energy dependence → model adjustment,

FALSTAFF
Four Arm cLover for the STudy of Actinide Fission Fragments

Fragments in coincidence
- Charges
- Kinetic energies
- Final masses (after n evaporation)
- Initial masses (before n evaporation)

D-One

Neutron mult.

Fragments + gamma
Fragments + neutrons

Actinides to study: $^{238,235}U$, ^{239}Pu, ^{237}Np, ^{232}Th, ^{233}U, …

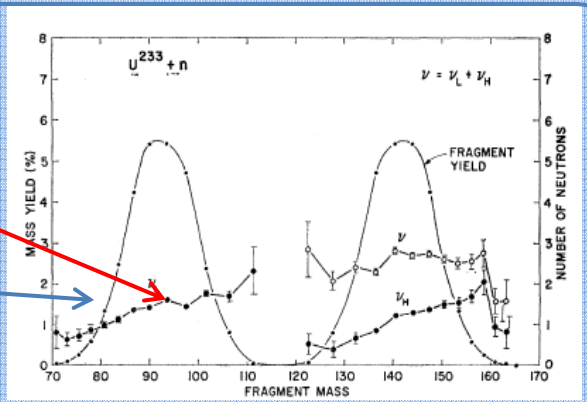

FALSTAFF

2V method → mass before evaporation
EV method → mass after evaporation

2V method → TOF measurement
good time resolution <150 ps
good position resolution ~1.5 mm

start : MCP
stop : SED

or 2 SEDs

EV method → Energy measurement
good energy resolution ~1%
ΔE & E meas. (charge id)

Segmented Ionization Chamber

3rd step

Possible final setup

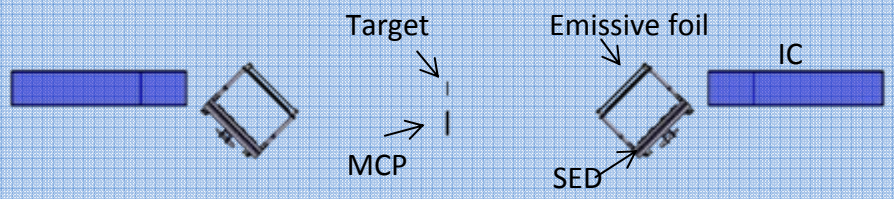

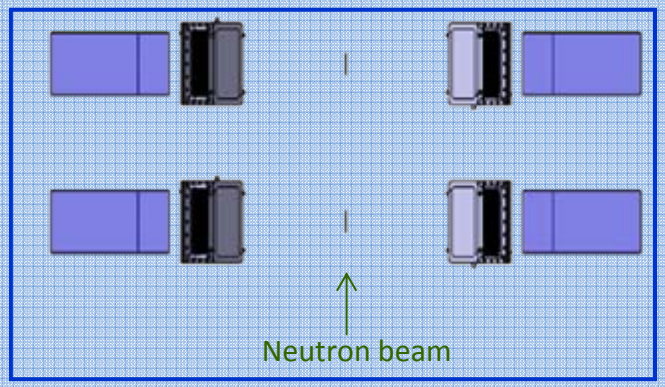

FALSTAFF : phases and tests

Nov. 2012

Preparation phase : light fragment masses

Simulations, End of SED tests
and Test at Saclay with
- Cf source
- TOF : minised + Sed (50 cm)
- E : ionization chamber

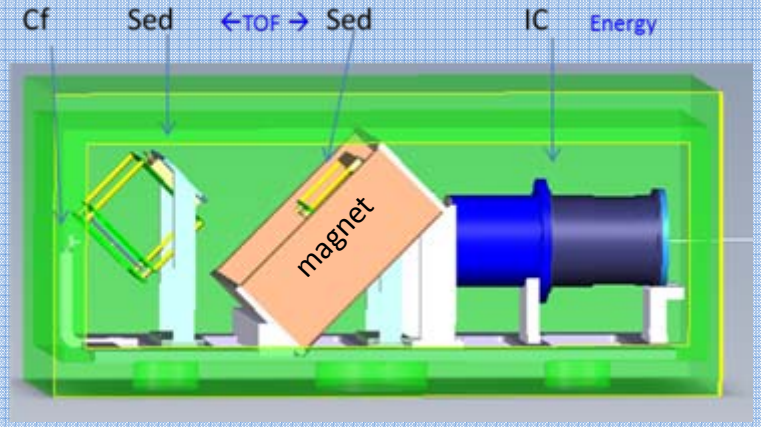

Charge, Energy and
Final Mass of **Light** Fragments
(comparisons with simulations)

Energy loss measurements forseen

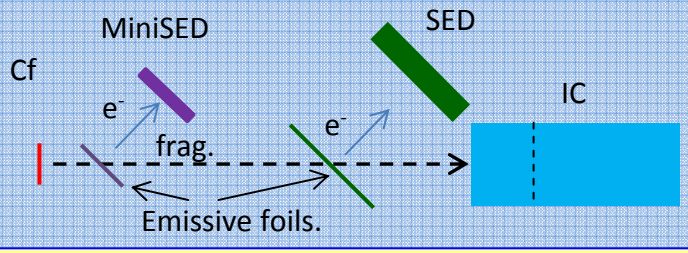

Test at Saclay with Cf source (2 fgs)
and **Experiment at NFS (1 arm++)**
- TOF MCP + Sed (50 cm)
- E : 2 ionization chambers

Phase 2

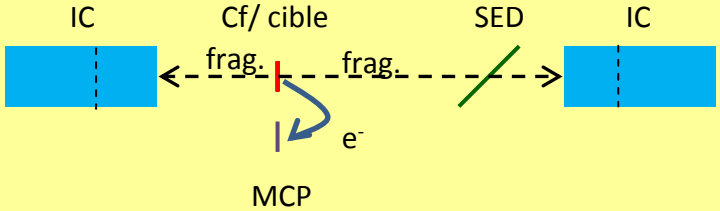

Charge and Final Mass
of **Light and Heavy** Fragments
Energy of both fragments

(Efficiency= 0.67%)

GEANT4 Simulations (1)

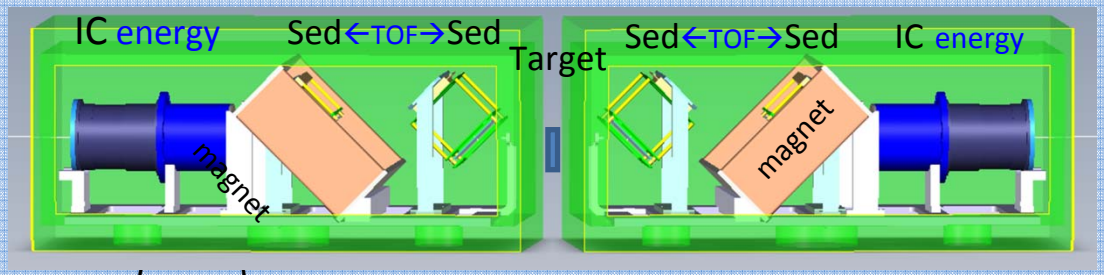

Event generation : Geometry (efficiency),
Materials (stragglings, energy losses)

Analysis : Z known, corrections for energy losses
mass reconstruction from simulated V & E

Cs-140, 74 MeV
Rb- 98, 105 MeV

Initial 140.00 (0.58) 98.00 (0.58) 140.00 (0.88) 98.06 (0.38) Final

Without evaporation

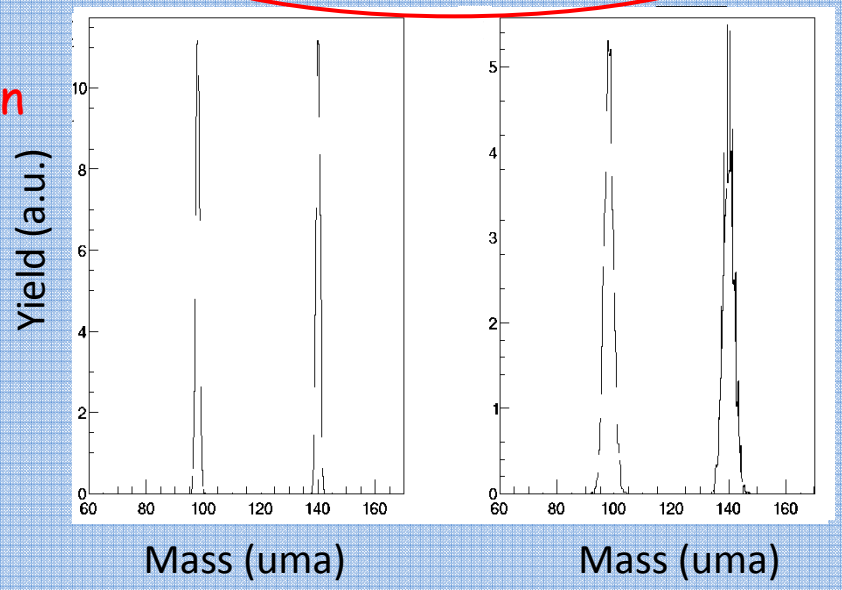

No experimental resolution

$\sigma(E) \rightarrow 1\%$

$\sigma(pos) \rightarrow 2$ and 1.5 mm

$\sigma(t) \rightarrow 150$ ps

E. Wilhelm

GEANT4 Simulations (2)

E. Wilhelm

Very encouraging result !

Event-by-event analysis
→ $M_i - M_f$

$\langle M_i - M_f \rangle$ vs M_i

$$\Delta(M_i - M_f) = \frac{\langle Mi - Mf \rangle}{\sqrt{N}}$$

Theoretical
Simulated
Reconstructed

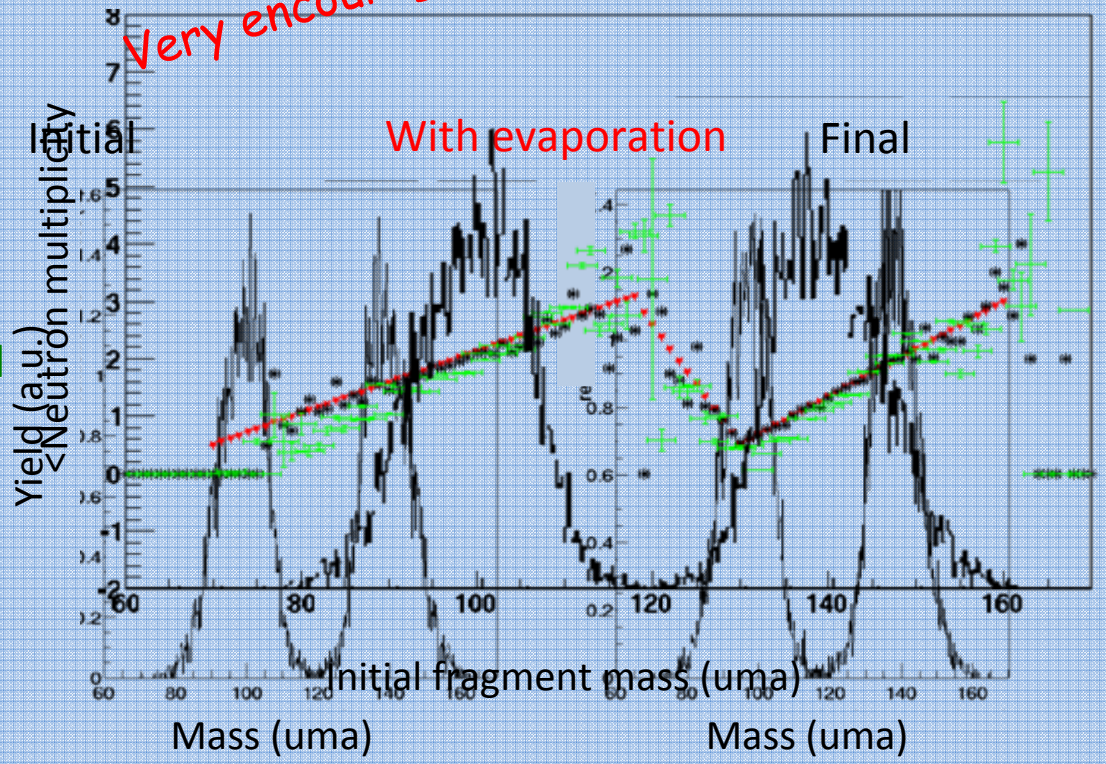

In GEANT4 :
- To be verified : energy loss « tables »
- To be improved : angular straggling
- To be implemented : inhomogeneity, charge resolution,

Secondary Electron Detector (SED) Performances

Th. Materna

New SED prototype with an active surface of 200 x 140 mm²

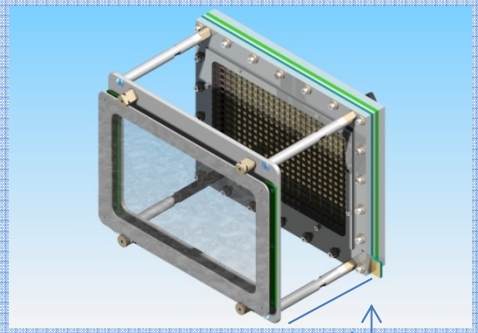

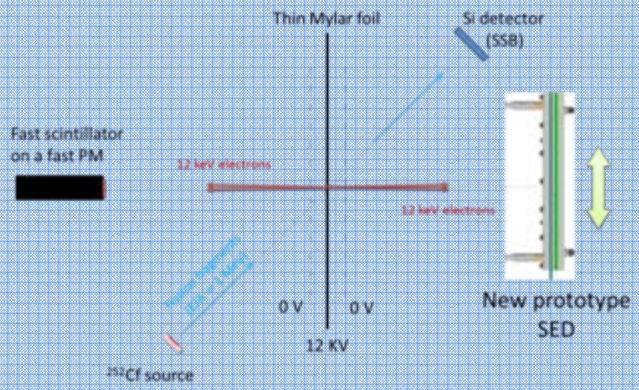

Time signal from anodes at mid-distance (1.6 mm) between the detector window and the cathode.

Position reconstructed from a (68x48) pixelized cathode.

Time resolution σ< 150 ps

Position resolution < 3 mm without a magnetic field
< 1 mm with a magnetic field

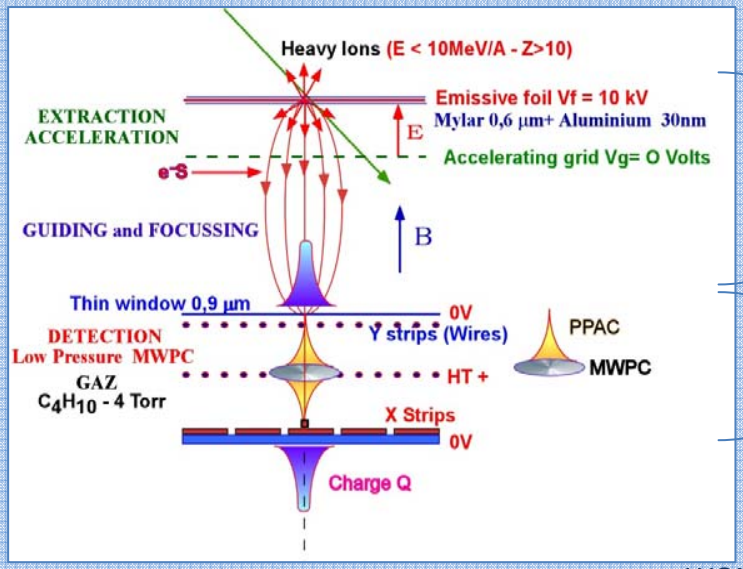

Time resolution tests with a ^{252}Cf source

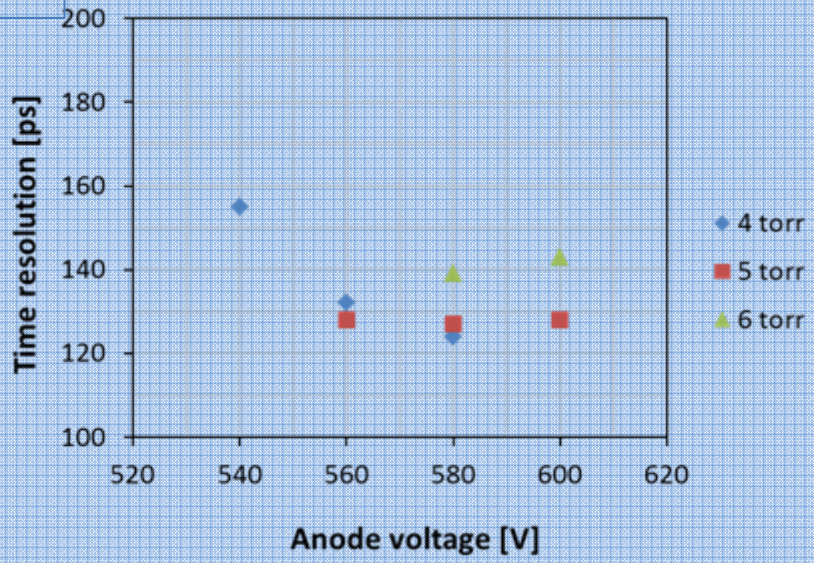

SUMMARY/CONCLUSIONS

NFS facility :

→ Building in construction,
→ All components are designed, some of them are under construction
→ Radioprotection and safety issues are solved
→ 1st beam in 2014

FALSTAFF :

→ Project divided in 3 phases to overcome stopping points
→ Simulations are encouraging about the feasibility
→ Detector performances seem OK but have to be checked further
→ Test with one arm in preparation → milestone for the construction
→ Well positioned for D-One experiment (positive SAC recommandation)